PK 17.001 SLD 1
PK 17.001 SLD 3
PK 19.001 SLD 5

PALFINGER
LIFETIME EXCELLENCE

SOLID, SIMPLE AND AFFORDABLE

PK 17.001 SLD 1 (NON-CE)

STD

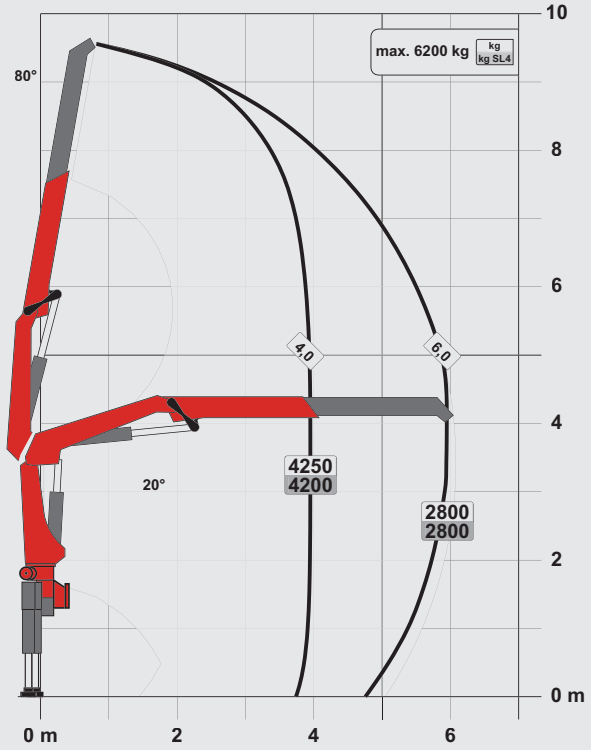

A

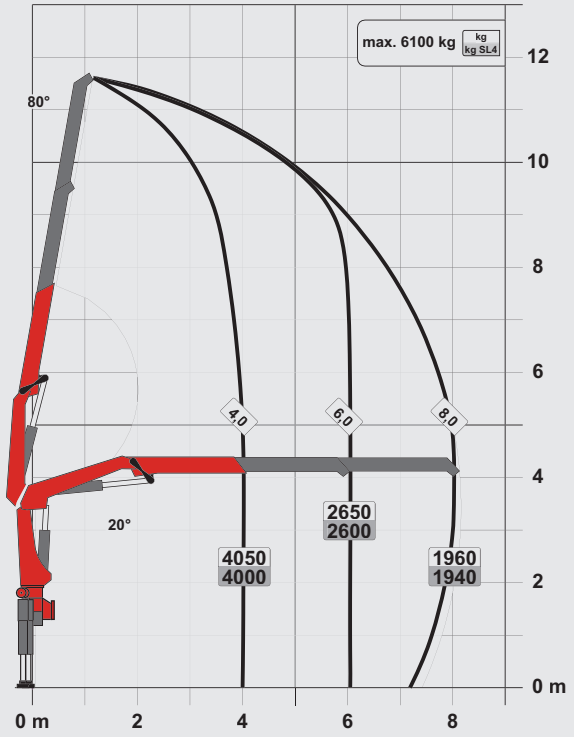

C

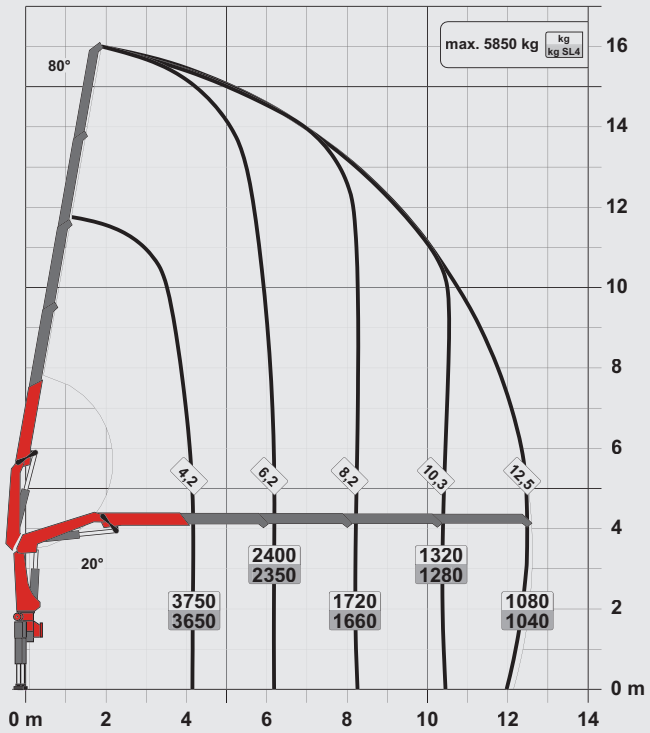

D

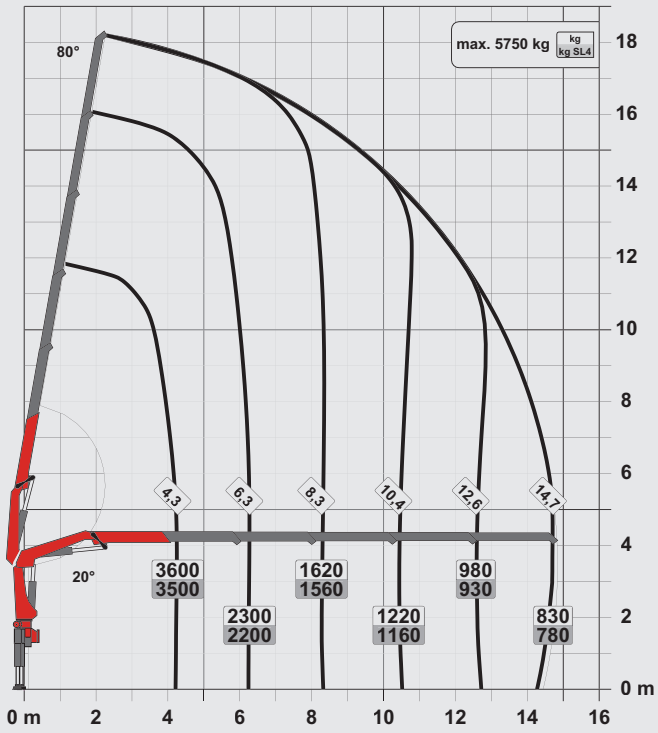

PERFECT DIMENSIONS

B

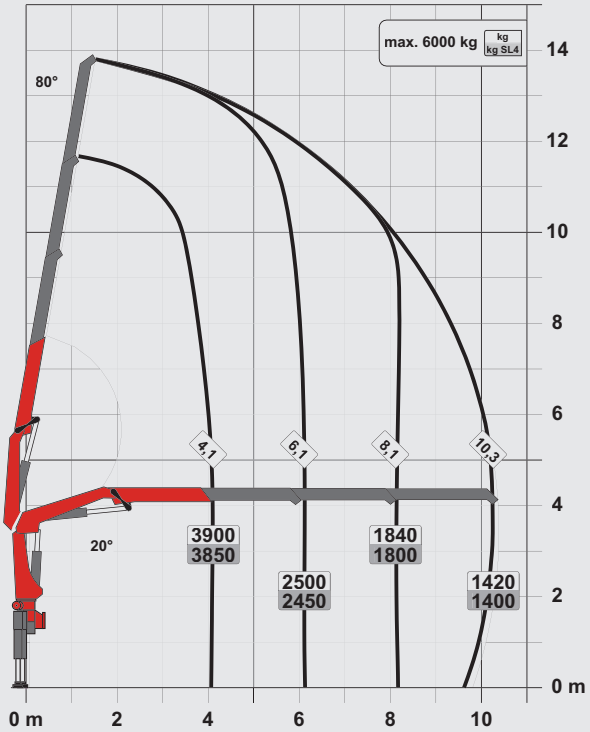

SLD 1 (NON-CE)

- Single Link Plus
- Optional:
  - Overload protection OSK
  - Top seat control
  - High stand control
  - Radio remote control
- NON-CE model

TECHNICAL SPECIFICATIONS

Classification	EN 13001 HC1 HD4/S2	
Max. lifting moment	16.8 mt / 164.4 kNm	121250 ft.lb
Max. lifting capacity	6200 kg / 60.8 kN	13700 lb
Max. hydraulic outreach	14.8 m	48' 7''
Max. manual outreach	19.0 m	62' 4''
Slewing angle	420°	
Slewing torque	2.0 mt / 19.6 kNm	14460 ft.lb
Stabiliser spread (std./max.)	5.0 m / 6.6 m	16' 5'' / 21' 8''
Fitting space required (std.)	0.83 m	2' 8''
Width folded	2.55 m	8' 4''
Max. operating pressure	330 bar	4785 psi
Recommended pump capacity	from 40 l/min	10.6 US gpm
	to 60 l/min	15.9 US gpm
Dead weight (std.)	1670 kg	3680 lb

PK 17.001 SLD 3

STD

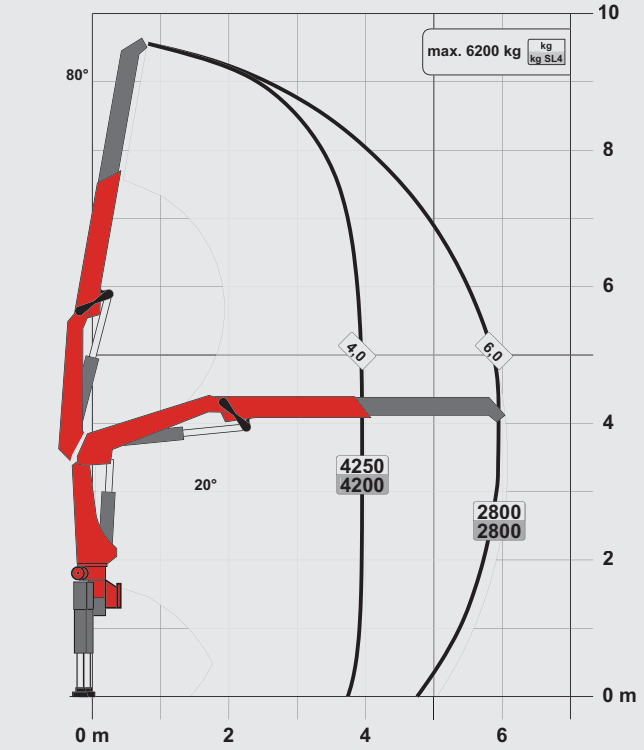

A

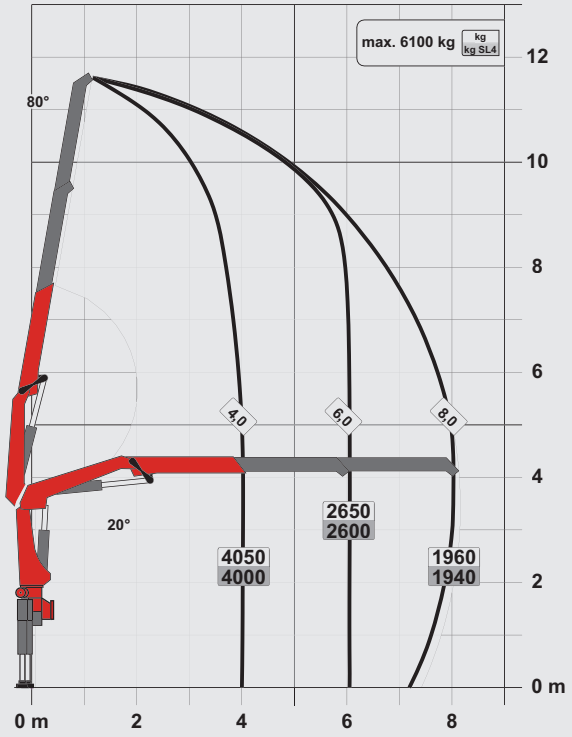

C

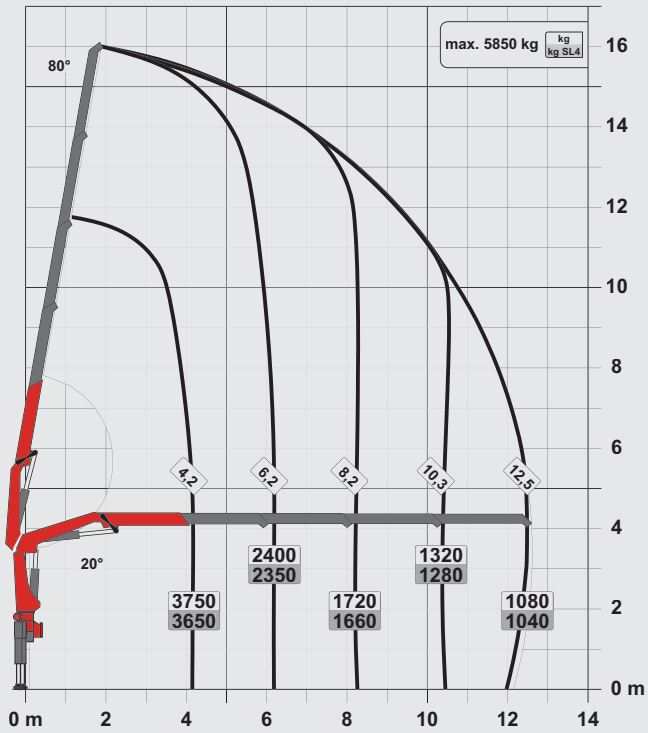

D

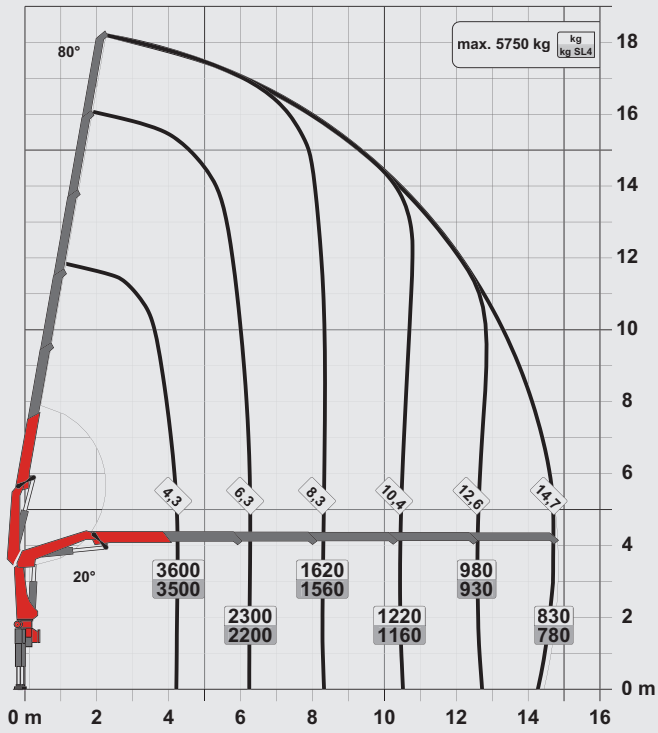

PERFECT DIMENSIONS

B

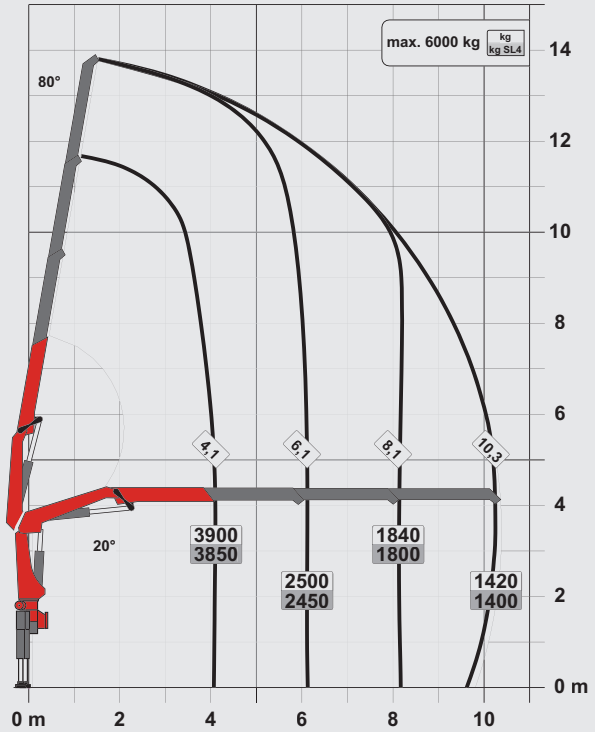

SLD 3

- Single Link Plus
- Paltronic 50 overload protection
- Optional:
  - Stability monitoring system ISC-S (standard for CE), HPSC-L, HPSC-E
  - High stand control
  - Radio remote control
  - Rope winch 2.5t on the knuckle boom
- NON-CE and CE model

TECHNICAL SPECIFICATIONS

Classification	EN 13001 HC1 HD4/S2	
Max. lifting moment	16.8 mt/164.4 kNm	121250 ft.lb
Max. lifting capacity	6200 kg/60.8 kN	13700 lb
Max. hydraulic outreach	14.8 m	48' 7''
Max. manual outreach	19.0 m	62' 4''
Slewing angle	420°	
Slewing torque	2.0 mt/19.6 kNm	14460 ft.lb
Stabiliser spread (std./max.)	5.0 m/ 6.6 m	16' 5''/ 21' 8''
Fitting space required (std.)	0.83 m	2' 8''
Width folded	2.55 m	8' 4''
Max. operating pressure	330 bar	4785 psi
Recommended pump capacity	from 40 l/min	10.6 US gpm
	to 60 l/min	15.9 US gpm
Dead weight (std.)	1670 kg	3680 lb

PK 19.001 SLD 5

STD

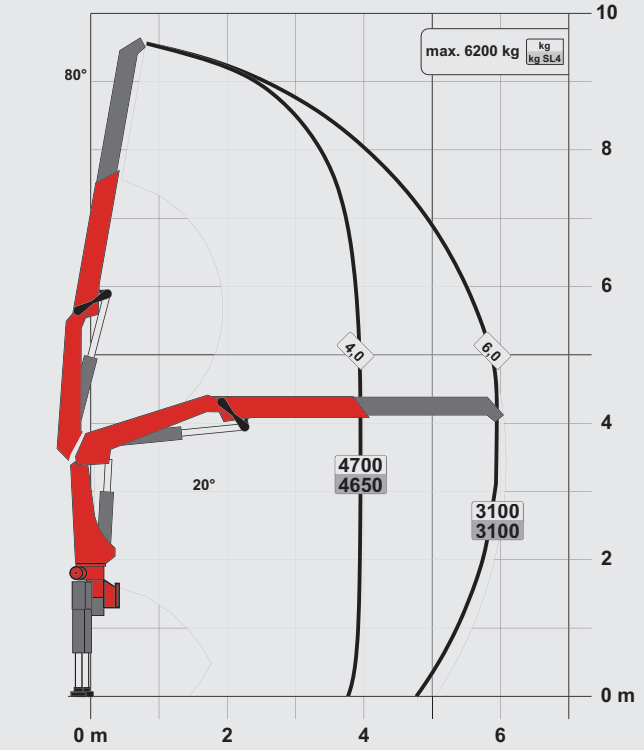

A

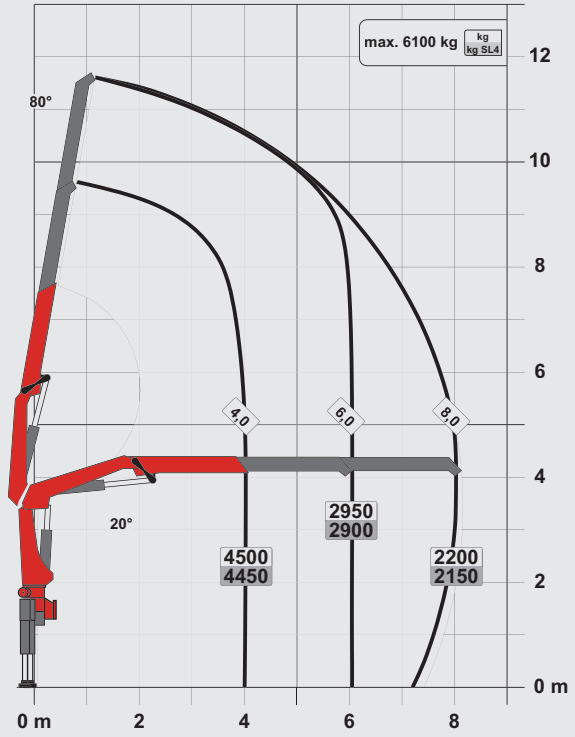

C

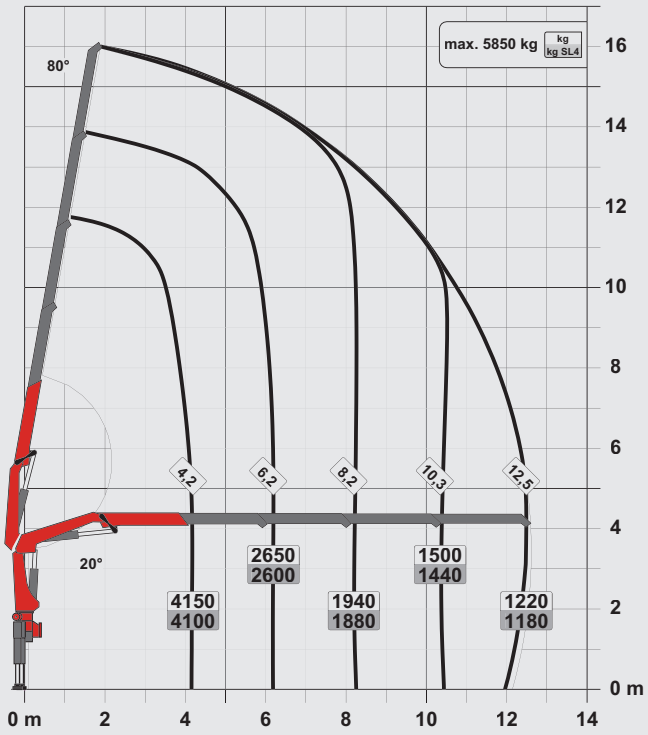

D

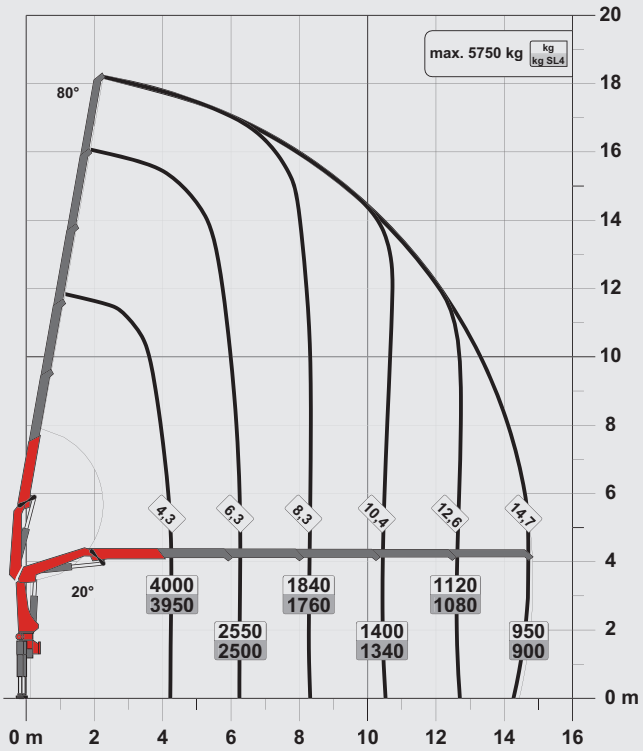

PERFECT DIMENSIONS

B

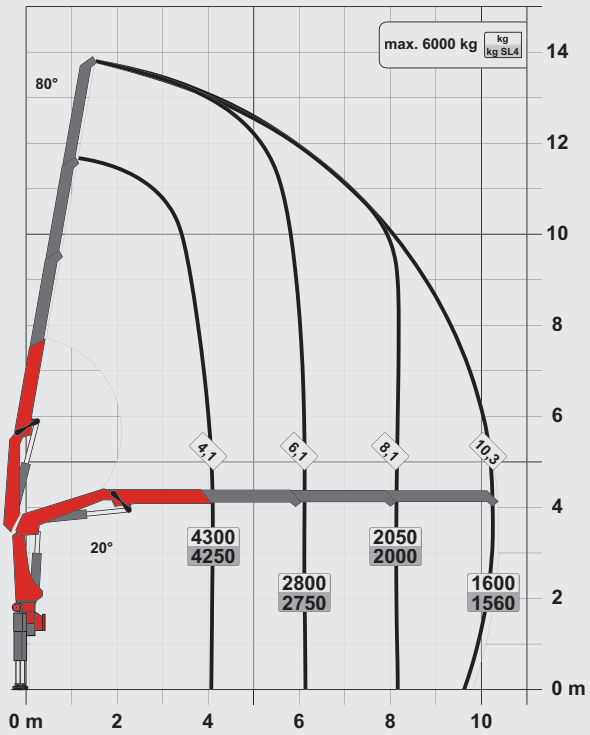

SLD 5

- Single Link Plus
- Paltronic 50 overload protection
- E-HPLS
- Load Sensing valve
- Radio remote control with LED display
- Optional:
  - Stability monitoring system ISC-S (standard for CE), HPSC-L, HPSC-E
  - Rope winch 2.5t on the knuckle boom
- NON-CE and CE model

TECHNICAL SPECIFICATIONS

Classification	EN 13001 HC1 HD4/S2	
Max. lifting moment	18.5 mt/181.4 kNm	133780 ft.lb
Max. lifting capacity	6200 kg/60.8 kN	13700 lb
Max. hydraulic outreach	14.8 m	48' 7''
Max. manual outreach	19.0 m	62' 4''
Slewing angle	420°	
Slewing torque	2.0 mt/19.6 kNm	14460 ft.lb
Stabiliser spread (std./max.)	5.0 m/ 6.6 m	16' 5''/ 21' 8''
Fitting space required (std.)	0.83 m	2' 8''
Width folded	2.55 m	8' 4''
Max. operating pressure	360 bar	5220 psi
Recommended pump capacity	from 60 l/min	15.9 US gpm
	to 80 l/min	21.1 US gpm
Dead weight (std.)	1700 kg	3750 lb

WWW.PALFINGER.COM

DIMENSIONS

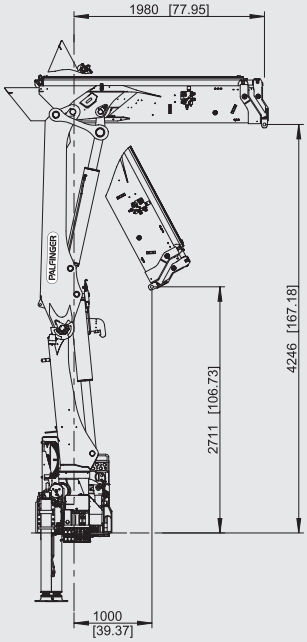

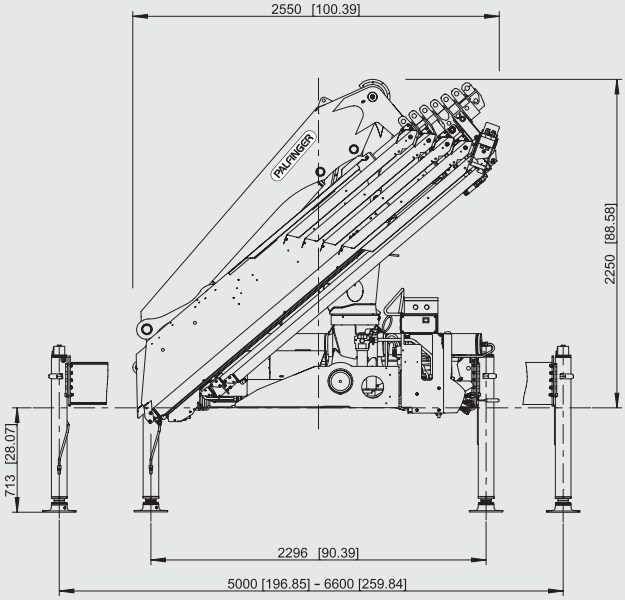

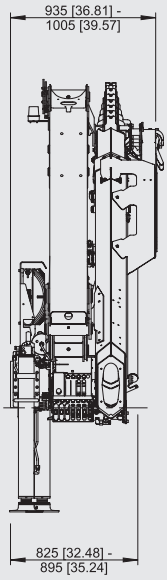

Cranes shown in the leaflet are partially optional equipped and do not always correspond to the standard version.
Country-specific regulations must be observed. Dimensions may vary. Subject to technical changes, errors and translation mistakes.

KP-PK17/19SLDM1+E/E 04 / 15, K 04 / 15, D 08 / 15